bürkert
FLUID CONTROL SYSTEMS

Pneumatic control unit for decentralised automation of process valves ELEMENT

- Compact design
- Integrated pilot valve with manual override
- Integrated control air routing in the actuator
- Visual position indicator
- With ATEX II cat. 3G/D and cat. 2G/D approval

Product variants described in the data sheet may differ from the product presentation and description.

Can be combined with

Type 2100
Pneumatically operated 2/2-way angle seat valve ELEMENT for decentralized automation

Type 2101
Pneumatically operated 2/2-way globe valve ELEMENT for decentralised automation

Type 2103
2/2-way diaphragm valve with pneumatic stainless steel actuator (Type ELEMENT) for decentralised automation

Type 2104
T-diaphragm valve with pneumatic actuator in stainless steel (Type ELEMENT) for decentralised automation

Type 2105
Tank bottom diaphragm valve with pneumatic actuator in stainless steel (Type ELEMENT) for decentralised automation

Type 2106
Pneumatically operated 3/2-way seat valve ELEMENT for decentralized automation

Type description

The pneumatic control unit Type 8690 is designed for decentralised automation of ELEMENT Type 21xx pneumatic process valves. Mechanical or inductive limit switches register the valve position. The integrated pilot valve controls single or double-acting actuators. The design of the control unit and the actuator enables an internal control air routing without external tubings. Besides the electrical position feedback, the status of the device is shown directly on the pneumatic control unit itself. The housing is easy to clean and features proven IP protection and chemically resistant materials for use in hygienic processing, in food, beverage and pharmaceutical industries. Focused on wash down applications, the IP protection of the housing is supported by a positive pressure inside the control head. Combined with Bürkert ELEMENT actuators, the pneumatic actuating system enables spring chamber aeration that avoids actuator chamber contamination from the environment.

DTS 1000108879 EN Version: AA Status: RL (released | freigegeben | validé) printed: 09.01.2025

© Christian Bürkert GmbH & Co. KG, Subject to alteration

Visit product website

Table of contents

1. General technical data **3**

2. Approvals and conformities **5**

2.1. General notes 5
2.2. Conformity 5
2.3. Standards 5
2.4. Explosion protection 5
2.5. North America (USA/Canada) 5
2.6. Others 6
China Compulsory Certification (CCC) 6

3. Materials **6**

3.1. Material specifications 6

4. Dimensions **7**

4.1. Mounting on ELEMENT process valve Type 21xx 7

5. Device/Process connections **8**

5.1. Electrical connections 8
Multipole connection 8
Cable gland 8

6. Product installation **10**

6.1. Combination options with pneumatic ELEMENT process valves 10

7. Ordering information **11**

7.1. Bürkert eShop 11
7.2. Bürkert product filter 11
7.3. Ordering chart 12
Pneumatic control unit for decentralised automation of ELEMENT On/Off process valves Type 21xx 12
7.4. Ordering chart accessories 13
Standard accessories ELEMENT 13
Adapter kits ELEMENT 13

DTS 1000108879 EN Version: AA Status: RL (released | freigegeben | validé) printed: 09.01.2025

1. General technical data

Product properties	
Dimensions	Further information can be found in chapter "4. Dimensions" on page 7.
Material	
Body	PPS
Seal	EPDM
Cover	PC
Commissioning	
Setting valve end position	Manual
Manual override of pilot valve	Yes
Status display	
Display of device and valve status	Optical
Optical position indicator (mechanical)	Yes
Performance data	
Position sensor	
Stroke range for linear actuator	
Valve spindle, initiator	2...28 mm
Valve spindle, micro switch	7...28 mm
Position feedback	
Micro switch	1x or 2x micro switch (24 V DC)
Initiator	1x or 2x inductive proximity switch 3-wire (24 V DC) 1x or 2x inductive proximity switch NAMUR (8 V DC) (ATEX II 2G Ex ia IIC T6)
Electrical data	
Operating voltage	
Pilot valve	24 V DC ± 10 %, residual ripple 10 % DC, power consumption 1 W
Residual ripple	10 %
Power consumption	< 1 W
Micro switch	Max. 24 V DC, max. 2 A
Initiator	10...24 V DC, max. 100 mA external load per initiator
Protection class	III according to DIN EN 61140
Electrical connection	
Multipole version	M12, 8-pin
Cable gland version	M16 × 1.5 (cable Ø 5...10 mm) with screw terminals for cable cross sections 0.14...1.5 mm²
Pneumatic data	
Control medium	Neutral gases, air, quality class according to ISO 8573 - 1
Dust content	Class 7 (< 40 µm particle size)
Particle density	Class 5 (< 10 mg/m³)
Pressure dew point	Class 3 (← 20 °C or min. 10 °C below the lowest operating temperature)
Oil content	Class X (< 25 mg/m³)
Air supply filter	Exchangeable
Mesh size	~0.1 mm
Supply pressure	3...7 bar [1.) 2.)]
Pilot air port	Threaded connection G ⅛ stainless steel or push-in connector (pipe Ø 6 mm / ¼")
Actuating system	
Circuit function	Single and double-acting
Air capacity	250 l_N/min (for aeration and ventilation) (Q_{Nn} value according to definition at pressure drop from 7 to 6 bar abs)
Actuator series/size	Type 21xx, actuator Ø 70/90/130/225 mm

DTS 1000108879 EN Version: AA Status: RL (released | freigegeben | validé) printed: 09.01.2025

Approvals and conformities	
Explosion protection	
Ignition protection class	II 3G Ex ec IIC T4 Gc II 3D Ex tc IIIC T135 °C Dc II 2G Ex ia IIC T* Gb II 2D Ex ia IIIC T135 °C Db
ATEX	BVS 14 ATEX E 008 X II 3G Ex ec IIC T4 Gc II 3D Ex tc IIIC T135 °C Dc BVS 14 ATEX E052 X II 2G Ex ia IIC T* Gb II 2D Ex ia IIIC T135 °C Db
IECEx	IECEx BVS 14.0009 X Ex tc IIIC T135 °C Dc Ex ec IIC T4 Gc IECEx BVS 14.0035 X Ex ia IIIC T135 °C Db Ex ia IIC T* Gb
Further information can be found in chapter **"2.4. Explosion protection" on page 5**.	
North America (USA/Canada	
UL Listed for the USA and Canada	cULus certificate: E238179 Further information can be found in chapter **"2.5. North America (USA/Canada)" on page 5**.
FM Explosion Protection	Increased Safety for Class I, Zone 2, AEx ec IIC T4 Gc hazardous (classified) locations, indoors and outdoors (IP54). Alternatively marked as Class I Division 2 Groups A, B, C, and D; T4. Further information can be found in chapter **"2.5. North America (USA/Canada)" on page 5**.
Others	
China Compulsory Certification (CCC)	The products with Ex approval are suitable for import and use for hazardous applications in China. Further information can be found in chapter **"2.6. Others" on page 6**.
Further information can be found in chapter **"2. Approvals and conformities" on page 5**.	
Environment and installation	
Operating conditions	
Ambient temperature	
With pilot valve	- 10...+ 55 °C
Without pilot valve	- 20...+ 60 °C
Degree of protection	IP65/IP67 according to EN 60529, 4X according to NEMA 250 Standard
Operating altitude	Up to 2000 m above sea level
Installation and mechanical data	
Installation position	As required, preferably with actuator in upright position
Valve actuator (type, size)	ELEMENT Type 21xx (actuator size Ø 70/90/130/225 mm)
Adapter kit	Further information can be found in chapter **"Adapter kits ELEMENT" on page 13**.

1.) The supply pressure must be 0.5...1 bar above the minimum required pilot pressure of the valve actuator.
2.) Pressure data: overpressure to atmospheric pressure

DTS 1000108879 EN Version: AA Status: RL (released | freigegeben | validé) printed: 09.01.2025

2. Approvals and conformities

2.1. General notes

- The approvals and conformities listed below must be stated when making enquiries. This is the only way to ensure that the product complies with all required specifications.
- Not all available versions can be supplied with the below mentioned approvals or conformities.

2.2. Conformity

In accordance with the Declaration of Conformity, the product is compliant with the EU Directives.

2.3. Standards

The applied standards which are used to demonstrate compliance with the EU Directives are listed in the EU-Type Examination Certificate and/or the EU Declaration of Conformity.

2.4. Explosion protection

Approval	Description
	Optional: Explosion protection **ATEX:** BVS 14 ATEX E 008 X II 3G Ex ec IIC T4 Gc II 3D Ex tc IIIC T135 °C Dc BVS 14 ATEX E052 X II 2G Ex ia IIC T* Gb II 2D Ex ia IIIC T135 °C Db **IECEx:** IECEx BVS 14.0009 X Ex tc IIIC T135 °C Dc Ex ec IIC T4 Gc IECEx BVS 14.0035 X Ex ia IIIC T135 °C Db Ex ia IIC T* Gb

2.5. North America (USA/Canada)

Approval	Description
	Optional: UL Listed for the USA and Canada The products are UL Listed for the USA and Canada according to: • UL 61010-1 (ELECTRICAL EQUIPMENT FOR MEASUREMENT, CONTROL, AND LABORATORY USE – Part 1: General Requirements) • CAN/CSA-C22.2 No. 61010-1
	Optional: FM (Factory Mutual) – Explosion Protection Increased Safety for Class I, Zone 2, AEx ec IIC T4 Gc hazardous (classified) locations, indoors and outdoors (IP54). Alternatively marked as Class I Division 2 Groups A, B, C, and D; T4.

DTS 1000108879 EN Version: AA Status: RL (released | freigegeben | validé) printed: 09.01.2025

2.6. Others

China Compulsory Certification (CCC)

Approval	Description
	Optional: China Compulsory Certification (CCC) The products with Ex approval are suitable for import and use for hazardous applications in China.

3. Materials

3.1. Material specifications

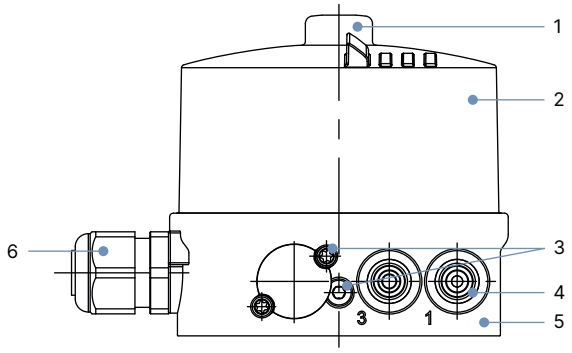

No.	Element	Material
1	Cover	PC
2	Seals	EPDM
3	Screws	Stainless steel
4	Push-in connector Threaded ports G ⅛	POM/stainless steel Stainless steel
5	Basic housing	PPS
6	Cable gland M12 plug connector	PA Stainless steel

DTS 1000108879 EN Version: AA Status: RL (released | freigegeben | validé) printed: 09.01.2025

4. Dimensions

4.1. Mounting on ELEMENT process valve Type 21xx

Note:
Dimensions in mm

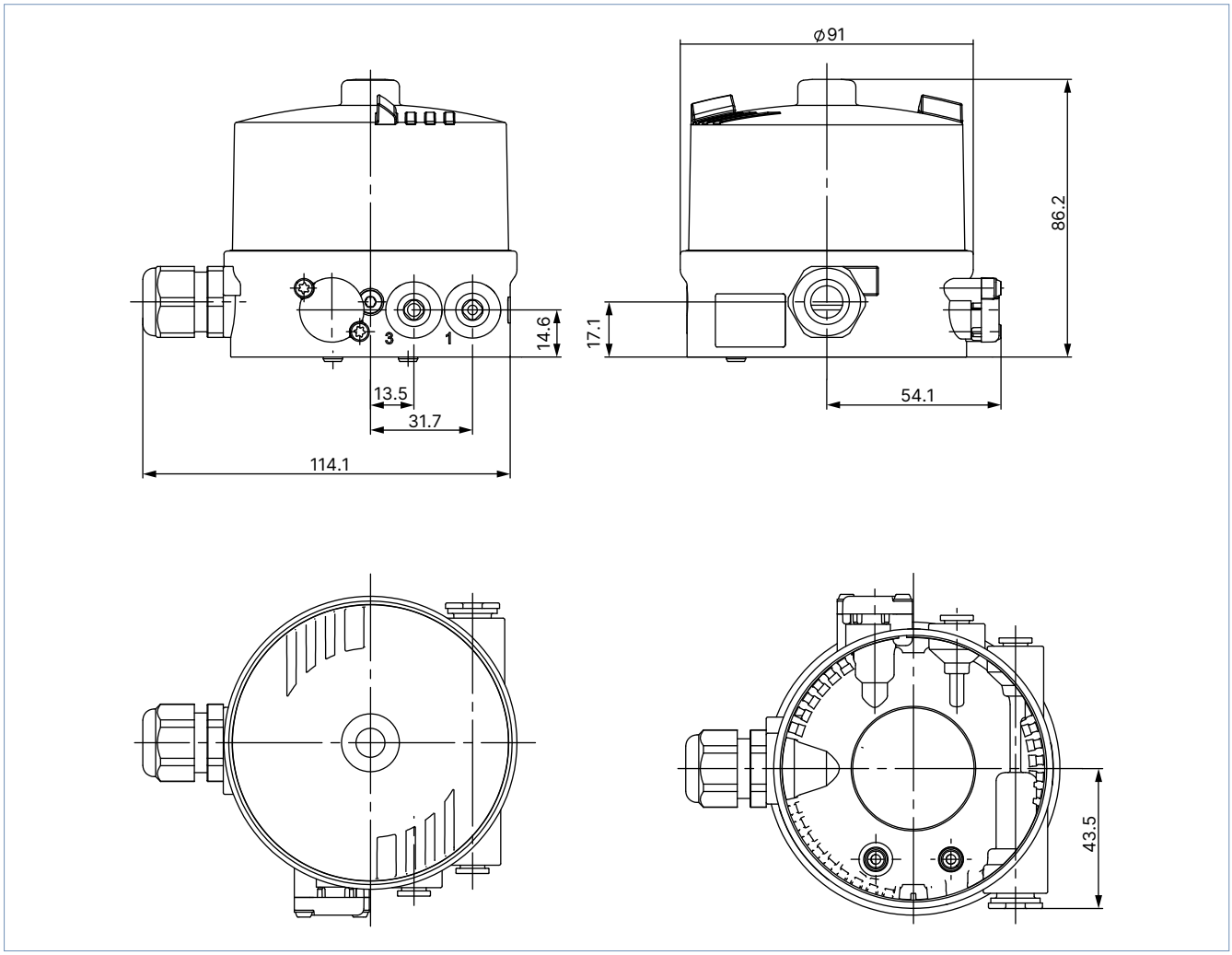

DTS 1000108879 EN Version: AA Status: RL (released | freigegeben | validé) printed: 09.01.2025

5. Device/Process connections

5.1. Electrical connections

Multipole connection

Circular plug M12, 8-pin

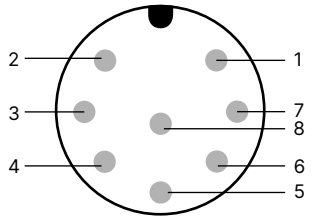

Plug configuration 24 V with micro switch

Pin	Assignment	Outer circuitry	
1	Micro switch top (NO)	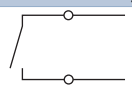	Micro switch top (NO)
3			Micro switch top (NO)
2	Micro switch bottom (NO)	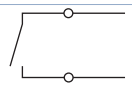	Micro switch bottom (NO)
4			Micro switch bottom (NO)
5	Valve control 0/24 V	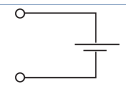	0/24 V DC ± 10 % Residual ripple 10 %
6	Valve control GND		
7	Not assigned	–	
8	Not assigned	–	

Terminal assignment with inductive proximity switch 3-wire

Pin	Assignment
1	INI 1 OUT Output
2	INI 2 OUT Output
3	INI - (GND) Supply
4	INI + (24 V DC) Supply
5	Valve control 0/24 V DC
6	Valve control GND

Cable gland

M16 × 1.5 (cable Ø 10 mm), screw terminals (1.5 mm²)

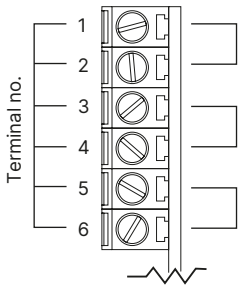

Terminal assignment 24 V with micro switch

Terminal	Assignment	Outer circuitry	
1	Micro switch top (NO)	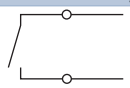	Micro switch top (NO)
2			Micro switch top (NO)
3	Micro switch bottom (NO)	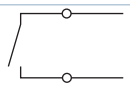	Micro switch bottom (NO)
4			Micro switch bottom (NO)
5	Valve control 0/24 V	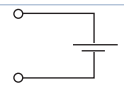	0/24 V DC ± 10 % Residual ripple 10 %
6	Valve control GND		

Terminal assignment with inductive proximity switch 3-wire

Terminal	Assignment
1	INI - (GND) Supply
2	INI 1 OUT Output
3	INI 2 OUT Output
4	INI + (24 V DC) Supply
5	Valve control 0/24 V DC
6	Valve control GND

DTS 1000108879 EN Version: AA Status: RL (released | freigegeben | validé) printed: 09.01.2025

Cable gland: M16 × 1.5 (cable Ø 10 mm), screw terminals (1.5 mm²)			
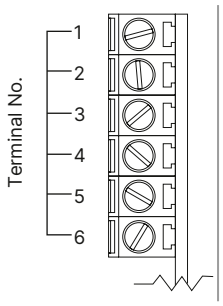	**Port configuration with Inductive proximity switch NAMUR**		
	Pin	**Assignment**	**Outer circuitry**
	1	INI Top +	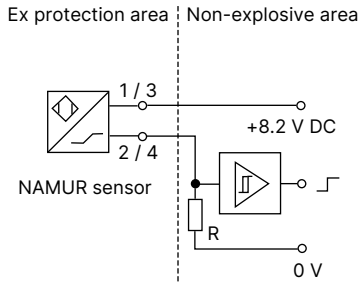 See footnote [1.)]
	2	INI Top –	
	3	INI Bottom +	
	4	INI Bottom –	
	5	Valve control +	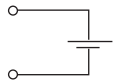 See footnote [2.)]
	6	Valve control GND	

1.) According to NAMUR recommendation. Observe the Turck KEMA 02 ATEX 1090X-type examination certificate.
2.) Barrier signal see PTB 07 ATEX 2048

DTS 1000108879 EN Version: AA Status: RL (released | freigegeben | validé) printed: 09.01.2025

6. Product installation

6.1. Combination options with pneumatic ELEMENT process valves

Note:
A decentralised, **automated valve system** consists of **pneumatic control unit Type 8690** and an **ELEMENT process valve Type 21xx**.

The following information is required to select a complete system:

- **Article no.** of the desired **control head Type 8690,** see "Pneumatic control unit for decentralised automation of ELEMENT On/Off process valves Type 21xx" on page 12
- **Article no.** of the desired **process valve Type 21xx,** see **data sheet Type 2100 ▸, Type 2101 ▸** and **Type 2103 ▸**

You order two components and receive a completely assembled and tested valve.

Example for decentralised automation of On/Off ELEMENT valve systems

Pneumatic control unit	Pneumatic process valve		
Type 8690 ▸	**Type 2100 ▸** Angle seat valve	**Type 2101 ▸** Globe valve	**Type 2103 ▸** Diaphragm valve

On/Off ELEMENT valve system		
Type 8801-YE-K ELEMENT valve system 2100 + 8690	**Type 8801-GC-K** ELEMENT valve system 2101 + 8690	**Type 8801-DF-K** ELEMENT valve system 2103 + 8690

DTS 1000108879 EN Version: AA Status: RL (released | freigegeben | validé) printed: 09.01.2025

7. Ordering information

7.1. Bürkert eShop

Bürkert eShop – Easy ordering and quick delivery

You want to find your desired Bürkert product or spare part quickly and order directly? Our online shop is available for you 24/7. Sign up and enjoy all the benefits.

Order online now

7.2. Bürkert product filter

Bürkert product filter – Get quickly to the right product

You want to select products comfortably based on your technical requirements?
Use the Bürkert product filter and find suitable articles for your application quickly and easily.

Try out our product filter

DTS 1000108879 EN Version: AA Status: RL (released | freigegeben | validé) printed: 09.01.2025

7.3. Ordering chart

Pneumatic control unit for decentralised automation of ELEMENT On/Off process valves Type 21xx

Note:
All non-ATEX versions are UL-approved.

End position feedback			Electrical connection	Circuit function pilot valve system	Pilot air ports	Article no.			
Inductive switch [2.] 24 V DC PNP	Inductive switch NAMUR 8 V DC Ex ia IIC T6	Micro switch 24 V DC				Standard	ATEX II Cat. 3G/D, IECEx, CCC [1.]	ATEX II Cat. 2G/D	cFMus CL I ZN 2/CL I DIV 2 (with ATEX/IECEx II 3G/D)
2	–	–	M12 plug connector	Single-acting	G ⅛	227222	264968	–	–
2	–	–		Double-acting	G ⅛	264939	264957	–	–
2	–	–		Without	G ⅛	227190	264949	–	–
2	–	–	Cable gland	Single-acting	G ⅛	227220	264967	–	20054430
2	–	–		Double-acting	G ⅛	264941	264956	–	20054423
2	–	–		Without	G ⅛	227189	264948	–	20054458
1	–	–	M12 plug connector	Single-acting	G ⅛	227218	264964	–	–
1	–	–		Double-acting	G ⅛	264940	264953	–	–
1	–	–		Without	G ⅛	265151	264945	–	–
1	–	–	Cable gland	Single-acting	G ⅛	227216	264963	–	20054427
1	–	–		Double-acting	G ⅛	264942	264952	–	20054419
1	–	–		Without	G ⅛	265154	264944	–	20054452
–	2	–		Single-acting	G ⅛	–	–	265143	–
–	2	–		Double-acting	G ⅛	–	–	265144	–
–	2	–		Without	G ⅛	–	–	265142	–
–	–	2	M12 plug connector	Single-acting	G ⅛	227234	–	–	–
–	–	1		Single-acting	G ⅛	227230	–	–	–
–	–	2	Cable gland	Single-acting	G ⅛	227232	–	–	–
–	–	2		Without	G ⅛	227195	–	–	–
Without end position feedback			Cable gland	Single-acting	G ⅛	225883	264961	–	20054425
				Double-acting	G ⅛	265156	265935	–	20054418

1.) CCC (China Compulsory Certificate) for device versions with Ex approval
2.) Inductive proximity switch 3-wire

Further versions on request

Additional
Push-in pilot air ports (tube Ø 6 mm and ¼")

DTS 1000108879 EN Version: AA Status: RL (released | freigegeben | validé) printed: 09.01.2025

7.4. Ordering chart accessories

Standard accessories ELEMENT

Note:
Must be ordered separately.

Description	Article no.
M12 circular socket with cable, 8-pin, cable length: 5 m, for input and output signals	919267
Silencer G ⅛	780779
Silencer 6 mm, PE	902662

Adapter kits ELEMENT

Note:
Must be ordered separately.

Adapter kits for third-party actuators can be found in the data sheet **Adaptation for third-party actuators Type KK01** ▶ or contact the appropriate Bürkert sales office.

Description	Actuator size	Control function	Article no.
Adapter kit ELEMENT Types 21xx	Ø 70/90/130 mm	Universal	665720
Adapter kit ELEMENT Types 21xx	Ø 225 mm	Universal	60025905

DTS 1000108879 EN Version: AA Status: RL (released | freigegeben | validé) printed: 09.01.2025