With pneumatic and electric actuators

ARI-STEVI® 423 / 463
Pneumatic actuator
ARI-DP 34 - 34T

- Reversible pneumatic actuator
- Actuator with rolling diaphragm
- Air supply pressure max. 6 bar
- Stem protection by bellow
- Maintenance-free O-ring sealing
- Assembly of additional devices acc. to DIN IEC 60534-6

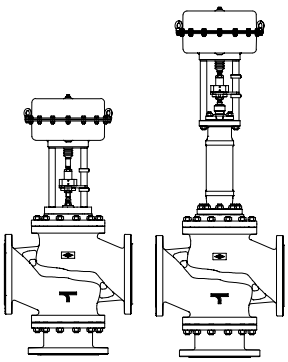

Page 4

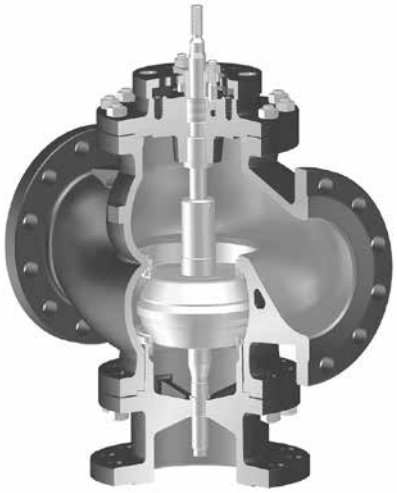

Fig. 423

ARI-STEVI® 423 / 463
Electric actuator
ARI-PREMIO 5 - 25 kN
ARI-PREMIO-Plus 2G 5 - 25 kN

- Enclosure IP 65
- 2 torque switches
- Handwheel
- Additional devices available, e.g. potentiometer

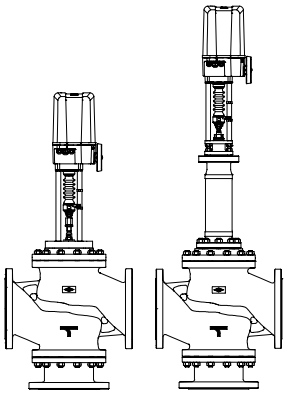

Page 8

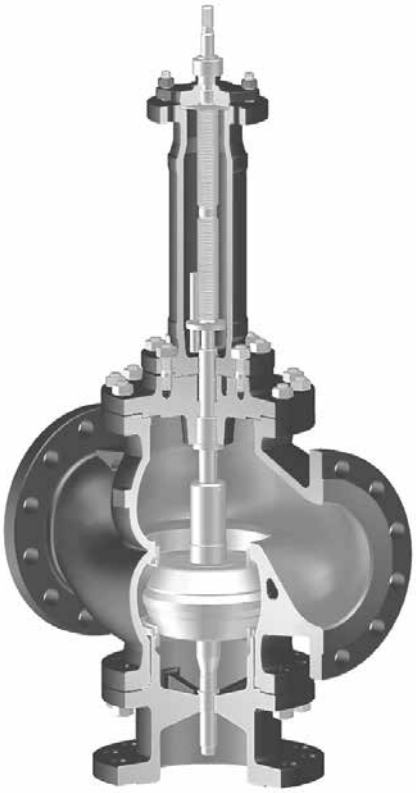

Fig. 463

ARI-STEVI® 423 / 463
Electric actuator
AUMA SAR 07.6 - 14.6

- Enclosure IP 67
- 2 torque switches
- 2 travel switches
- Handwheel
- Overheating protection for motor as standard
- Additional devices available, e.g. potentiometer
- Explosion proof version available

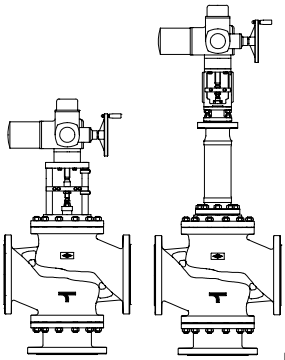

Page 10

Figure	Nominal pressure	Material	Nominal diameter
12.423 / 12.463	PN16	EN-JL1040	DN200-250
22.423 / 22.463	PN16	EN-JS1049	DN200-250
22.423	PN16	EN-JS1049	DN300
34.423 / 34.463	PN25	1.0619+N	DN200-250
35.423 / 35.463	PN40	1.0619+N	DN200-250
Other materials and versions on request.			

Information / restriction of technical rules need to be observed!

ARI-Valves of EN-JL1040 are not allowed to be operated in systems acc. to TRD 110.

A production permission acc. to TRB 801 No. 45 is available.
(Acc. to TRB 801 No. 45 EN-JL1040 is not allowed.)

The engineer, designing a system or a plant, is responsible for the selection of the correct valve.

Resistance and fitness must be verified, contact manufacturer for information (refer to Product overview and Resistance list).

Stem sealing

Fig. 423	standard	optional	
	DN200-300	DN200-300	DN200-300
	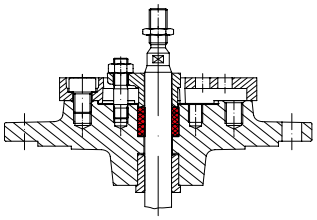	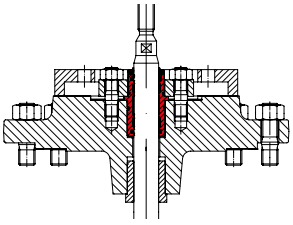	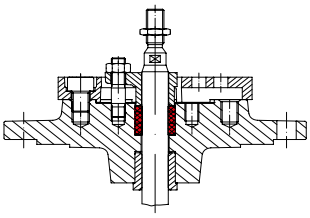
	II. PTFE-packing -10°C to 250°C	I. EPDM-sealing -10°C to 150°C (allowed for water and steam up to 180°C)	II. Pure graphite-packing -10°C to 450°C

Fig. 463	standard	optional
	DN200-250	DN200-250
	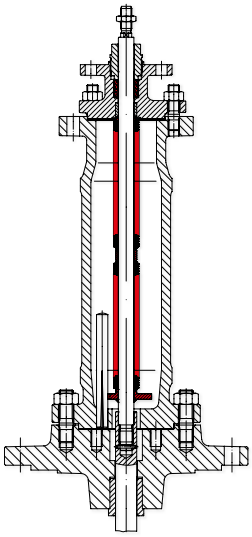	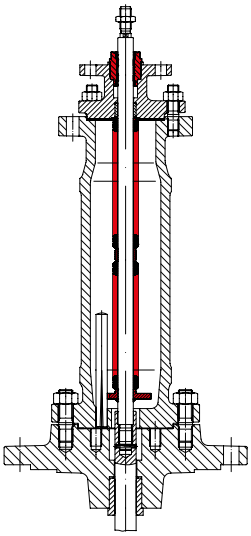
	III. Stainless steel-bellow with pure graphite-packing -60°C to 450°C	III. Stainless steel bellows seal with EPDM-sealing -60°C to 150°C (allowed for water and steam up to 180°C)

Pressure-temperature-ratings

Intermediate values for max. permissible operational pressures can be determined by linear interpolation of the given temperature / pressure chart.

acc. to DIN EN 1092-2			-60°C to <-10°C [1]	-10°C to 120°C	150°C	200°C	250°C	300°C	350°C	400°C	450°C
EN-JL1040	PN16	(bar)	--	16	14,4	12,8	11,2	9,6	--	--	--
EN-JS1049	PN16	(bar)	on request	16	15,5	14,7	13,9	12,8	11,2	--	--

acc. to manufacturers standard			-60°C to <-10°C [1]	-10°C to 120°C	150°C	200°C	250°C	300°C	350°C	400°C	450°C
1.0619+N	PN25	(bar)	18,7	25	23,9	22	20	17,2	16	14,8	8,2
1.0619+N	PN40	(bar)	30	40	38,1	35	32	28	25,7	23,8	13,1

acc. to DIN EN 1092-1			-60°C to <-10°C [1]	-10°C to 100°C	150°C	200°C	250°C	300°C	350°C	400°C	450°C
1.4408	PN40	(bar)	40	40	36,3	33,7	31,8	29,7	28,5	27,4	--

[1] Valve with extended bonnet, studs and nuts made of A4-70 (at temperatures below -10°C)

Plug design standard			Guiding	Rangeability
standard				
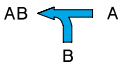 **Mixing plug** **with two screwed seat rings** • Parabolic plug, metal seat; V-port plug, metal seat	- Leakage class IV acc. to DIN EN 60534-4 - Flow characteristic: linear (lin) / linear (lin)	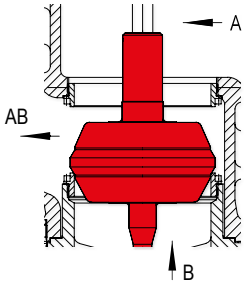	Stem / Plug shaft	30 : 1
Plug design optional			**Guiding**	**Rangeability**
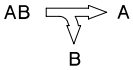 **Diverting plug** **with two screwed seat rings** • Parabolic plug, metal seat; V-port plug, metal seat	- Leakage class IV acc. to DIN EN 60534-4 - Flow characteristic: linear (lin) / linear (lin)	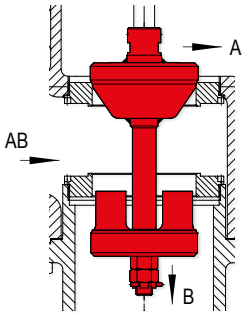	Stem / Seat ring	30 : 1

Operation		
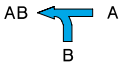 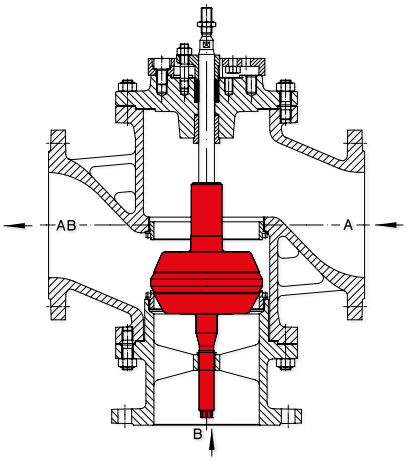 Design with mixing plug	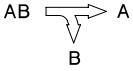 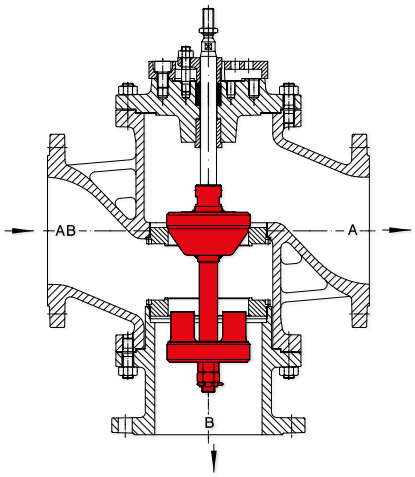 Design with diverting plug (Attentionn: reduced Kvs-value)	ARI-Control valves are suitable for use with pneumatic or electric actuators. According to the application two different variations are possible (see drawings on the left) Design with mixing plug as standard. Select when the valve is used for mixing service (2 inlets, 1 outlet). Design with diverting plug will be used exclusively for diverting service.

Control valve in 3-way-form with pneumatic actuator DP (3-way mixing valve / 3-way diverting valve)

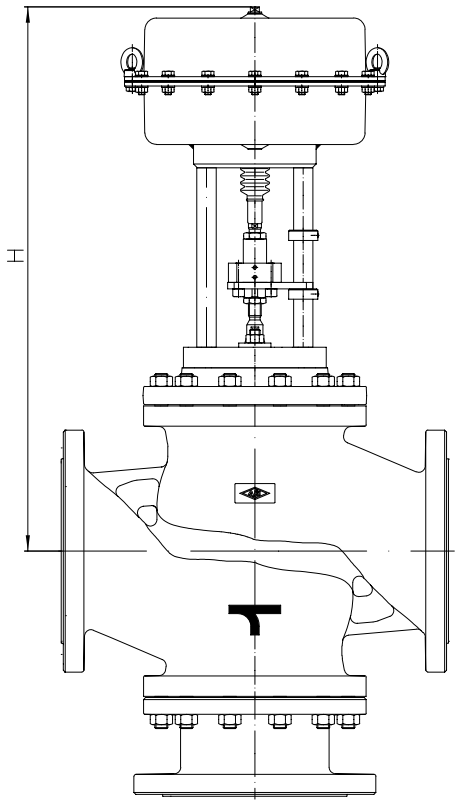

Fig. 423

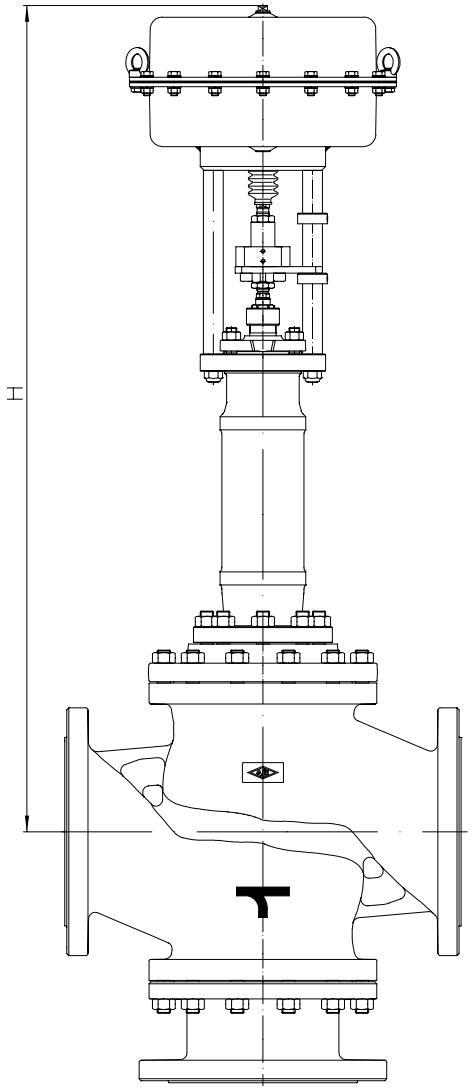

Fig. 463

Heights and weights

DN				200	250	300
Fig. 423	**DP34**	H	(mm)	845	905	932
		PN16	(kg)	280	409	403
		PN40	(kg)	319	492	--
	DP34T	H	(mm)	1095	1155	1149
		PN16	(kg)	351	480	474
		PN 40	(kg)	390	563	--
Fig. 463	**DP34**	H	(mm)	1285	1345	--
		PN16	(kg)	302	432	--
		PN 40	(kg)	328	514	--
	DP34T	H	(mm)	1498	1558	--
		PN16	(kg)	373	503	--
		PN 40	(kg)	399	585	--

Further dimensions refer to pages 16-17.

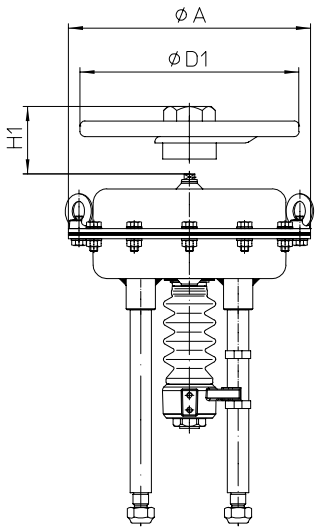

DP32 / DP33 / DP34

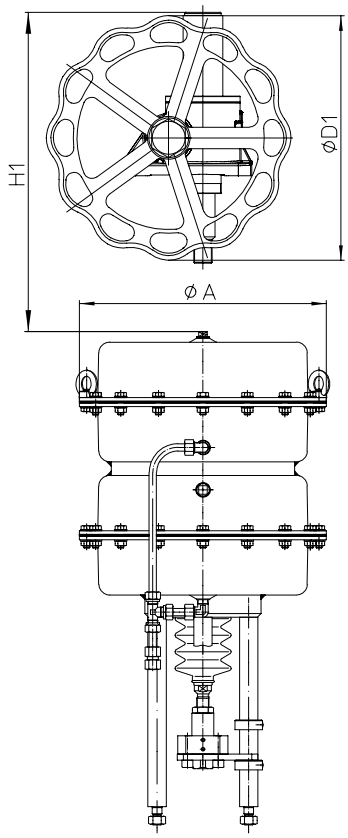

DP34T

Actuator data			DP34	DP34T
Ø A		(mm)	405	
Effective diaphragm area		(cm^2)	800	1600
Top mounted handwheel	Ø D1	(mm)	400	
	H1	(mm)	442	635
	Weight	(kg)	17	41
Further technical data of the actuator: refer to data sheet ARI-DP.				

max. permissible closing pressures on flow-to-open P2 = 0.
Observe pressure-temperature-limits, refer to page 2.

DN							200		250		300	
AB A B **Mixing function**	Kvs-value		standard			(m³/h)		**630**		**1000**		**1500**
			reduced			(m³/h)	400		630		1000	
	max. diff. pressure [1]					(bar)	10		10		10	
	Seat-Ø A/B					(mm)	150	200	200	250	250	
	Travel					(mm)	50	65	65		65	75
DP34 **800 cm²** **Spring closes on air failure A -> AB** (stem retracting by spring) or **Spring closes on air failure B -> AB** (stem extending by spring)	Spring range (bar)	0,8-2,4	Air supply pressure min. (bar) [2]	3,2	I./II.	(bar)	2,5					
					III.	(bar)	2,5					
		1,0-2,0		3,0	I./II.	(bar)		1,8	1,8	1,1	1,1	
					III.	(bar)		1,8	1,8	1,1		
		1,5-3,0		4,5	I./II.	(bar)	5,6					
					III.	(bar)	5,6					
		2,0-4,0		6,0	I./II.	(bar)	7,8	4,3	4,3	2,6	2,6	
					III.	(bar)	7,8	4,3	4,3	2,6		

DN							200		250	
AB A B **Diverting function**	Kvs-value		standard			(m³/h)		**355**		**560**
			reduced			(m³/h)	212		355	
	max. diff. pressure [1]					(bar)	10		10	
	Seat-Ø A/B					(mm)	115	150	150	180
	Travel					(mm)	50		50	65
DP34 **800 cm²** **Spring closes on air failure AB -> A** (stem extending by spring) or **Spring closes on air failure AB -> B** (stem retracting by spring)	Spring range (bar)	0,4-1,2	Air supply pressure min. (bar) [2]	1,6	I./II.	(bar)	1,6			
					III.	(bar)	1,6 a)			
		0,8-2,4		3,2	I./II.	(bar)	4,5	2,5	2,5	
					III.	(bar)	4,6	2,5	2,5	
		1,0-2,0		3,0	I./II.	(bar)				2,3
					III.	(bar)				2,3
		1,5-3,0		4,5	I./II.	(bar)	9,8	5,6	5,6	
					III.	(bar)	9,8	5,6	5,6	
		2,0-4,0		6,0	I./II.	(bar)	13,5	7,8	7,8	5,3
					III.	(bar)	13,5	7,8	7,8	5,3

I. Fig. 423: EPDM-sealing
II. Fig. 423: PTFE- / pure graphite-packing
III. Fig. 463: Bellows seal

[1] max. differential pressure drop

[2] Air supply pressure max. to actuator: 6 bar Restriction: a) 5 bar b) 4,5 bar c) 4 bar d) 3,5 bar e) 3 bar

max. permissible closing pressures on flow-to-open P2 = 0.
Observe pressure-temperature-limits, refer to page 2.

DN							200		250		300	
AB A B **Mixing function**	Kvs-value		standard			(m³/h)		**630**		**1000**		**1500**
			reduced			(m³/h)	400		630		1000	
	max. diff. pressure [1]					(bar)	10		10		10	
	Seat-Ø A/B					(mm)	150	200	200	250	250	
	Travel					(mm)	50	65	65		65	75
DP34T 1600 cm² Spring closes on air failure A -> AB (stem retracting by spring) or **Spring closes on air failure B -> AB** (stem extending by spring)	Spring range (bar)	0,4-1,2	Air supply pressure min. (bar) [2]	1,6	I./II.	(bar)	2,5 b)	1,3 b)	1,3 b)			
					III.	(bar)	2,5 d)	1,3 d)	1,3 d)			
		0,55-2,4		3,0	I./II.	(bar)						1,2
		0,8-2,4		3,2	I./II.	(bar)	6					
					III.	(bar)	6 b)					
		1,0-2,0		3,0	I./II.	(bar)		4,3 a)	4,3 a)	2,6 a)	2,6 a)	
					III.	(bar)		4,3 c)	4,3 c)	2,7 c)		
		1,5-3,0		4,5	I./II.	(bar)	12,2					
					III.	(bar)	12,2 a)					
		2,0-4,0		6,0	I./II.	(bar)	16,6	9,2	9,2	5,8	5,8	
					III.	(bar)	16,6	9,2	9,2	5,8		

DN							200		250	
AB A B **Diverting function**	Kvs-value		standard			(m³/h)		**355**		**560**
			reduced			(m³/h)	212		355	
	max. diff. pressure [1]					(bar)	10		10	
	Seat-Ø A/B					(mm)	115	150	150	180
	Travel					(mm)	50		50	65
DP34T 1600 cm² Spring closes on air failure AB -> A (stem extending by spring) or **Spring closes on air failure AB -> B** (stem retracting by spring)	Spring range (bar)	0,2-1,0	Air supply pressure min. (bar) [2]	1,2	I./II.	(bar)	1,6 b)			
					III.	(bar)	1,6 e)			
		0,4-1,2		1,6	I./II.	(bar)	4,5 b)	2,5 b)	2,5 b)	1,7 b)
					III.	(bar)	4,6 d)	2,5 d)	2,5 d)	1,7 d)
		0,8-2,4		3,2	I./II.	(bar)	10,5	6	6	
					III.	(bar)	10,5 b)	6,1 b)	6,1 b)	
		1,0-2,0		3,0	I./II.	(bar)				5,3 a)
					III.	(bar)				5,3 c)
		1,5-3,0		4,5	I./II.	(bar)	20,9	12,2	12,2	
					III.	(bar)	21 a)	12,2 a)	12,2 a)	
		2,0-4,0		6	I./II.	(bar)	28,4	16,6	16,6	11,4
					III.	(bar)	28,4	16,6	16,6	11,5

I. Fig. 423: EPDM-sealing
II. Fig. 423: PTFE- / pure graphite-packing
III. Fig. 463: Bellows seal

[1] max. differential pressure drop

[2] Air supply pressure max. to actuator: 6 bar Restriction: a) 5 bar b) 4,5 bar c) 4 bar d) 3,5 bar e) 3 bar

Control valve in 3-way-form with electric actuator ARI-PREMIO (3-way mixing valve / 3-way diverting valve)

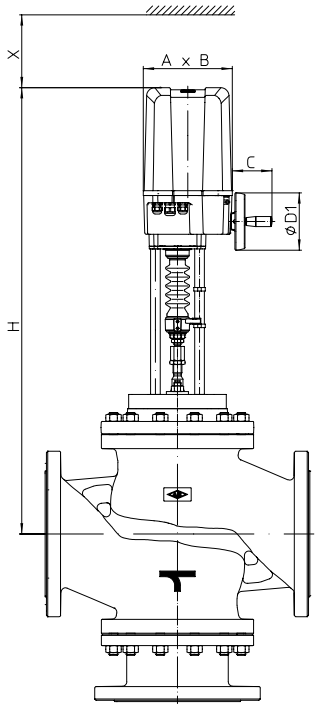

Fig. 423

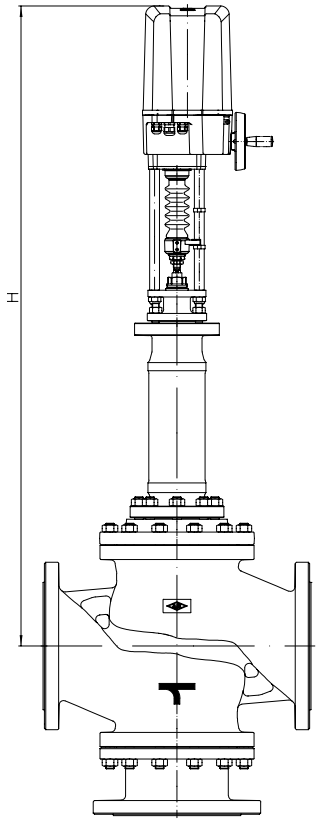

Fig. 463

Actuator data		5 kN	12 - 25 kN
A	(mm)	171	210
B	(mm)	156	184
C	(mm)	50	90
Ø D1	(mm)	90	130
X	(mm)	150	200
Further technical data of the actuator: refer to data sheet ARI-PREMIO/PREMIO-Plus 2G			

Heights and weights

DN				200	250	300
Fig. 423	**5 kN**	H	(mm)	843	903	--
		PN16	(kg)	242	371	--
		PN25/40	(kg)	281	454	--
	12 kN **15 kN**	H	(mm)	977	1057	1041
		PN16	(kg)	246	375	369
		PN25/40	(kg)	285	458	--
	25 kN	H	(mm)	953	1013	1041
		PN16	(kg)	247	376	370
		PN25/40	(kg)	286	459	--
Fig. 463	**5 kN**	H	(mm)	1265	1325	--
		PN16	(kg)	264	394	--
		PN25/40	(kg)	290	476	--
	12 kN **15 kN**	H	(mm)	1434	1494	--
		PN16	(kg)	268	398	--
		PN25/40	(kg)	294	480	--
	25 kN	H	(mm)	1434	1494	--
		PN16	(kg)	269	399	--
		PN25/40	(kg)	295	481	--

Further dimensions refer to pages 16-17.

max. permissible closing pressures on flow-to-open P2 = 0.
Observe pressure-temperature-limits, refer to page 2.

DN				200		250		300	
AB A B **Mixing function**	Kvs-value	standard	(m^3/h)		**630**		**1000**		**1500**
		reduced	(m^3/h)	400		630		1000	
	max. diff. pressure [1]		(bar)	10		10		10	
	Seat-Ø A/B		(mm)	150	200	200	250	250	
	Travel		(mm)	50	65	65		65	75
5 kN	Closing pressure	I./II./III.	(bar)	1,8					
	Operating time		(s)	132					
	Operating speed		(mm/s)	0,38					
12 kN	Closing pressure	I./II./III.	(bar)	5,7	3,1	3,1	1,9	1,9	1,9
	Operating time		(s)	132	171	171		171	197
	Operating speed		(mm/s)	0,38					
15 kN	Closing pressure	I./II./III.	(bar)	7,4	4	4	2,5	2,5	2,5
	Operating time		(s)	132	171	171		171	197
	Operating speed		(mm/s)	0,38					
25 kN	Closing pressure	I./II./III.	(bar)	13	7,2	7,2	4,5	4,5	4,5
	Operating time		(s)	132	171	171	171	171	197
	Operating speed		(mm/s)	0,38					

DN				200		250	
AB A B **Diverting function**	Kvs-value	standard	(m^3/h)		**355**		**560**
		reduced	(m^3/h)	212		355	
	max. diff. pressure [1]		(bar)	10		10	
	Seat-Ø A/B		(mm)	115	150	150	180
	Travel		(mm)	50		50	65
5 kN	Closing pressure	I./II./III.	(bar)	3,3	1,8	1,8	
	Operating time		(s)	132		132	
	Operating speed		(mm/s)	0,38			
12 kN	Closing pressure	I./II./III.	(bar)	10	5,7	5,7	3,9
	Operating time		(s)	132		132	171
	Operating speed		(mm/s)	0,38			
15 kN	Closing pressure	I./II./III.	(bar)	12,8	7,4	7,4	5,1
	Operating time		(s)	132		132	171
	Operating speed		(mm/s)	0,38			
25 kN	Closing pressure	I./II./III.	(bar)	22,3	13	13	9
	Operating time		(s)	132	132	132	171
	Operating speed		(mm/s)	0,38			
Further operating speeds: refer to data sheet ARI-PREMIO/PREMIO-Plus 2G							

$$\text{Operating time [s]} = \frac{\text{Travel [mm]}}{\text{Operating speed [mm/s]}}$$

I. Fig. 423: EPDM-sealing
II. Fig. 423: PTFE- / pure graphite-packing
III. Fig. 463: Bellows seal

[1] max. differential pressure drop

Control valve in 3-way-form with electric actuator Auma SAR (MATIC) (3-way mixing valve / 3-way diverting valve)

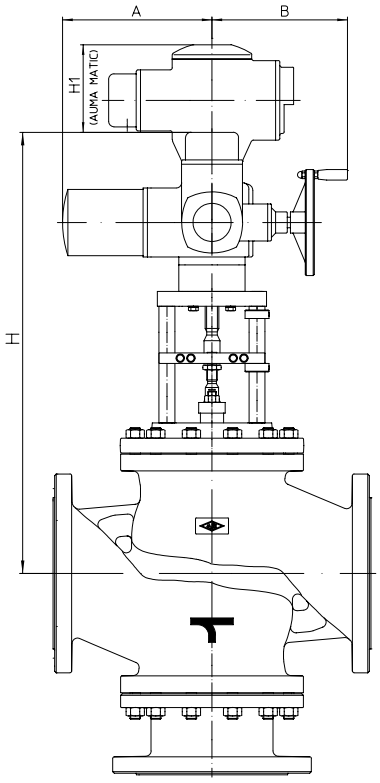

Fig. 423

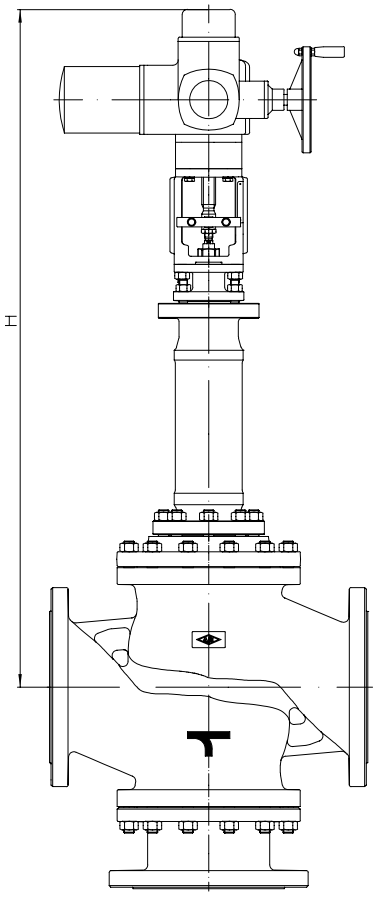

Fig. 463

Actuator data		SAR 07.6	SAR 10.2	SAR 14.2	SAR 14.6
A	(mm)	265	283	389	389
B	(mm)	249	254	336	336
H1 (AUMA MATIC)	(mm)	130		182	182
Motor voltage: 400V 50Hz 3~ (Other voltages on request) Technical data for actuator refer to price list.					

Heights and weights

DN				200	250	300
Fig. 423	**SAR 07.6**	H	(mm)	870	930	949
		PN16	(kg)	268	397	391
		PN40	(kg)	307	480	--
	SAR 10.2	H	(mm)	872	932	951
		PN16	(kg)	270	399	393
		PN40	(kg)	309	482	--
	SAR 14.2	H	(mm)	913	973	1027
		PN16	(kg)	301	430	424
		PN40	(kg)	340	513	--
	SAR 14.6 LE100	H	(mm)	1171	1231	--
		PN16	(kg)	347	476	--
		PN40	(kg)	386	559	--
Fig. 463	**SAR 07.6**	H	(mm)	1315	1375	--
		PN16	(kg)	286	416	--
		PN40	(kg)	312	498	--
	SAR 10.2	H	(mm)	1317	1377	--
		PN16	(kg)	288	418	--
		PN40	(kg)	314	500	--

(For version with AUMA SAR Ex other heights.)

Further dimensions refer to pages 16-17.

max. permissible closing pressures on flow-to-open P2 = 0.
Observe pressure-temperature-limits, refer to page 2.

Fig. 423

DN					200		250		300	
AB A B **Mixing function**	Kvs-value		standard	(m^3/h)		**630**		**1000**		**1500**
			reduced	(m^3/h)	400		630		1000	
	max. diff. pressure [1]			(bar)	10		10		10	
	Seat-Ø A/B			(mm)	150	200	200	250	250	
	Travel			(mm)	50	65	65		65	75
SAR 07.6 Output drive Form A TR 26 x 5 - LH	Closing pressure	I./II.	shut off	(bar)	11,9	6,6	6,6	4,1	4,1	4,1
			controlling [2]	(bar)	5,5	2,9	2,9	1,8	2,2	2,2
	Torque			(Nm)	60		60		60	
	Operating time (50 Hz)			(s)	55	71	71		71	82
	Output drive			(rpm)	11		11		11	
SAR 10.2 Output drive Form A TR 26 x 5 - LH	Closing pressure	I./II.	shut off	(bar)	24,8	13,9	13,9	8,8	8,8	8,8
			controlling [2]	(bar)	11,9	6,6	6,6	4,1	4,5	4,5
	Torque			(Nm)	120		120		120	
	Operating time (50 Hz)			(s)	55	71	71		71	82
	Output drive			(rpm)	11		11		11	
SAR 14.2 Output drive Form A TR 30 x 6 - LH	Closing pressure	I./II.	shut off	(bar)	40	23,9	23,9	15,3	15,2	15,2
			controlling [2]	(bar)	20	11,1	11,1	7,1	7,4	7,4
	Torque			(Nm)	250		250		250	
	Operating time (50 Hz)			(s)	63	59	59		59	68
	Output drive			(rpm)	8	11	11		11	
SAR 14.6 with LE100.1	Closing pressure	I./II.	shut off	(bar)	40	31,6	31,6	20,2		
			controlling [2]	(bar)	27,7	15,5	15,5	9,8		
	Torque			(Nm)	300	400	400			
	Operating time (50 Hz)			(s)	54	70	70			
	Output drive			(rpm)	8		8			

Fig. 463

DN					200		250	
AB A B **Mixing function**	Kvs-value		standard	(m^3/h)		**630**		**1000**
			reduced	(m^3/h)	400		630	
	max. diff. pressure [1]			(bar)	10		10	
	Seat-Ø A/B			(mm)	150	200	200	250
	Travel			(mm)	50	65	65	
SAR 07.6 Output drive Form A TR 26 x 5 - LH	Closing pressure	III.	shut off	(bar)	11,9	6,6	6,6	4,1
			controlling [2]	(bar)	5,5	3	3	1,8
	Torque			(Nm)	60		60	
	Operating time (50 Hz)			(s)	55	71	71	
	Output drive			(rpm)	11		11	
SAR 10.2 Output drive Form A TR 26 x 5 - LH	Closing pressure	III.	shut off	(bar)	18,4	10,2	10,2	6,5
			controlling [2]	(bar)	11,9	6,6	6,6	4,1
	Torque			(Nm)	90		90	
	Operating time (50 Hz)			(s)	55	71	71	
	Output drive			(rpm)	11	11	11	

I. Fig. 423: EPDM-sealing
II. Fig. 423: PTFE- / pure graphite-packing
III. Fig. 463: Bellows seal

[1] max. differential pressure drop
[2] Restrictions through max. permissible torque of the actuator at controlling operation.

max. permissible closing pressures on flow-to-open P2 = 0.
Observe pressure-temperature-limits, refer to page 2.

Fig. 423

DN					200		250	
AB → A, B **Diverting function**	Kvs-value		standard	(m^3/h)		**355**		**560**
			reduced	(m^3/h)	212		355	
	max. diff. pressure [1]			(bar)	10		10	
	Seat-Ø A/B			(mm)	115	150	150	180
	Travel			(mm)	50		50	65
SAR 07.6 Output drive Form A TR 26 x 5 - LH	Closing pressure	I. / II.	shut off	(bar)	20,5	11,9	11,9	8,2
			controlling [2]	(bar)	9,5	5,5	5,5	3,7
	Torque			(Nm)	60		60	
	Operating time (50 Hz)			(s)	55		55	71
	Output drive			(rpm)	11		11	
SAR 10.2 Output drive Form A TR 26 x 5 - LH	Closing pressure	I. / II.	shut off	(bar)	40	24,8	24,8	17,2
			controlling [2]	(bar)	20,5	11,9	11,9	8,2
	Torque			(Nm)	120		120	
	Operating time (50 Hz)			(s)	55		55	71
	Output drive			(rpm)	11		11	
SAR 14.2 Output drive Form A TR 10 x 6 - LH	Closing pressure	I. / II.	shut off	(bar)	40	40	40	29,6
			controlling [2]	(bar)	34,2	20	20	13,8
	Torque			(Nm)	175	250	250	
	Operating time (50 Hz)			(s)	63		63	59
	Output drive			(rpm)	8		8	11
SAR 14.6 **with LE100.1**	Closing pressure	I. / II.	shut off	(bar)	40	40	40	39,2
			controlling [2]	(bar)	40	27,7	27,7	19,2
	Torque			(Nm)	300		300	400
	Operating time (50 Hz)			(s)	54		54	70
	Output drive			(rpm)	8		8	

Fig. 463

DN					200		250	
AB → A, B **Diverting function**	Kvs-value		standard	(m^3/h)		**355**		**560**
			reduced	(m^3/h)	212		355	
	max. diff. pressure [1]			(bar)	10		10	
	Seat-Ø A/B			(mm)	115	150	150	180
	Travel			(mm)	50		50	65
SAR 07.6 Output drive Form A TR 26 x 5 - LH	Closing pressure	III.	shut off	(bar)	20,5	11,9	11,9	8,2
			controlling [2]	(bar)	9,6	5,5	5,5	3,7
	Torque			(Nm)	60		60	
	Operating time (50 Hz)			(s)	55		55	71
	Output drive			(rpm)	11		11	
SAR 10.2 Output drive Form A TR 26 x 5 - LH	Closing pressure	III.	shut off	(bar)	31,5	18,4	18,4	12,7
			controlling [2]	(bar)	20,5	11,9	11,9	8,2
	Torque			(Nm)	90		90	
	Operating time (50 Hz)			(s)	55		55	71
	Output drive			(rpm)	11		11	

I. Fig. 423: EPDM-sealing
II. Fig. 423: PTFE- / pure graphite-packing
III. Fig. 463: Bellows seal

[1] max. differential pressure drop
[2] Restrictions through max. permissible torque of the actuator at controlling operation.

Control valve in 3-way-form

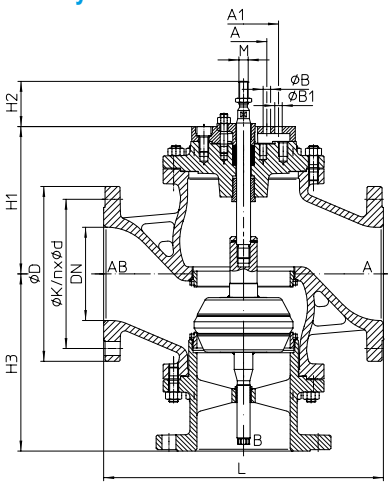

Fig. 423
DN200-250
(e.g.: DP34-34Tri; PREMIO 12-25kN)

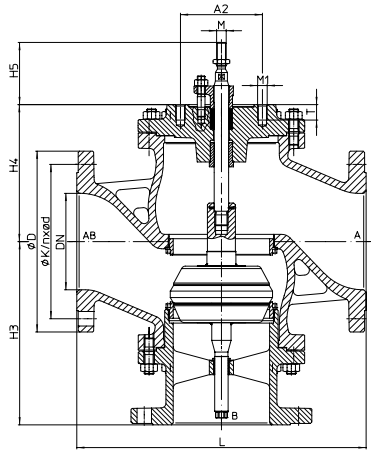

Fig. 423
DN200-250
(e.g.: AUMA SAR 07.6-10.2)

DN			200		250	
Dimensions						
M	Fig. 423	(mm)	M20			
	Fig. 463	(mm)	M16	M20	M16	M20
H1	Fig. 423	(mm)	322		376	
	Fig. 463	(mm)	797	723	857	783
H2	Fig. 423	(mm)	98			
	Fig. 463	(mm)	83	130	83	130
H3	Fig. 423 / 463	(mm)	380		440	
H4	Fig. 423	(mm)	284		344	
H5	Fig. 423	(mm)	130			
A	Fig. 423	(mm)	100			
	Fig. 463	(mm)	100	--	100	--
n x ØB	Fig. 423	(mm)	2 x 16			
	Fig. 463	(mm)	2 x 16	--	2 x 16	--
A1	Fig. 423	(mm)	150			
	Fig. 463	(mm)	--	150	--	150
n x ØB1	Fig. 423	(mm)	4 x 16			
	Fig. 463	(mm)	--	4 x 16	--	4 x 16
A2	Fig. 423	(mm)	170			
n x M1	Fig. 423	(mm)	4 x M20			
T	Fig. 423	(mm)	32			

Face-to-face dimension FTF series 1 according to DIN EN 558				
L		(mm)	600	730

Flanges acc. to DIN EN 1092-1/-2			Flange holes / -thickness tolerances acc. to DIN 2533/2544/2545	
ØD	PN16	(mm)	340	405
	PN25	(mm)	360	425
	PN40	(mm)	375	450
ØK	PN16	(mm)	295	355
	PN25	(mm)	310	370
	PN40	(mm)	320	385
n x Ød	PN16	(mm)	12 x 22	12 x 26
	PN25	(mm)	12 x 26	12 x 30
	PN40	(mm)	12 x 30	12 x 33

Weights				
Fig. 423	PN16	(kg)	235	364
	PN40	(kg)	274	447
Fig. 463	PN16	(kg)	257	387
	PN40	(kg)	283	469

max. permissible thrust		
Fig. 423	(kN)	59,1
Fig. 463	(kN)	34

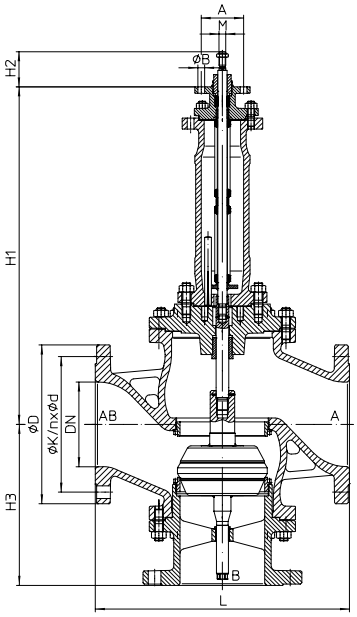

Fig. 463
DN200-250 M16
(e.g.: PREMIO 5-25kN; SAR 07.6 - 14.2)

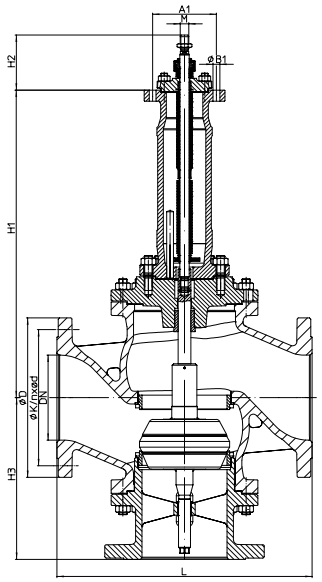

Fig. 463
DN200-250 M20
(e.g.: DP34-34Tri)

Control valve in 3-way-form

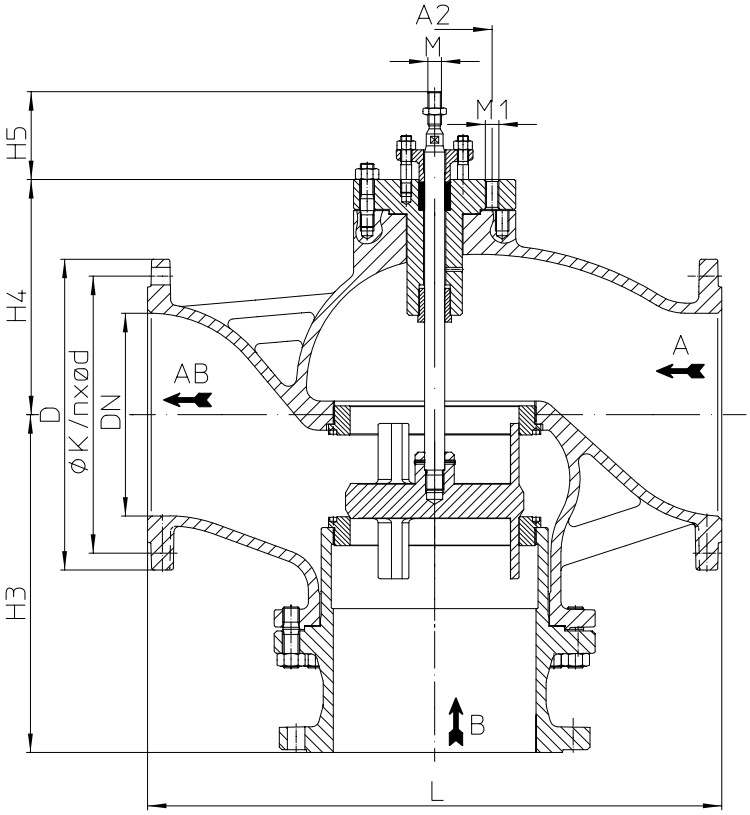

Fig. 423
DN300
(e.g.: DP34-34T; PREMIO 5-25kN; SAR 07.6 - 14.2)

DN			300
Dimensions			
M	Fig. 423	(mm)	M20
H3	Fig. 423	(mm)	500
H4	Fig. 423	(mm)	348
H5	Fig. 423	(mm)	130
A2	Fig. 423	(mm)	170
M1	Fig. 423	(mm)	4 x M20
T	Fig. 423	(mm)	44
Face-to-face dimension FTF series 1 according to DIN EN 558			
L		(mm)	850
Flanges acc. to DIN EN 1092-1/-2			Flange holes / -thickness tolerances acc. to DIN 2533/2544/2545
ØD	PN16	(mm)	460
ØK	PN16	(mm)	410
n x Ød	PN16	(mm)	12 x 26
Weights			
Fig. 423	PN16	(kg)	360
max. permissible thrust			
Fig. 423		(kN)	59,1

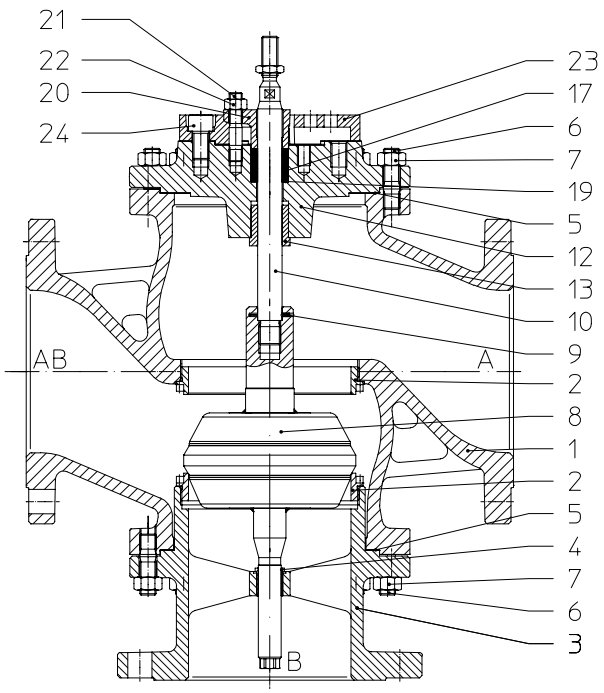

II. PTFE- / pure graphite-packing

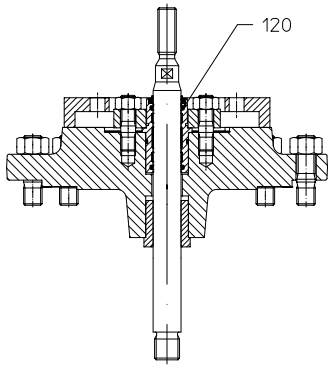

I. EPDM-sealing

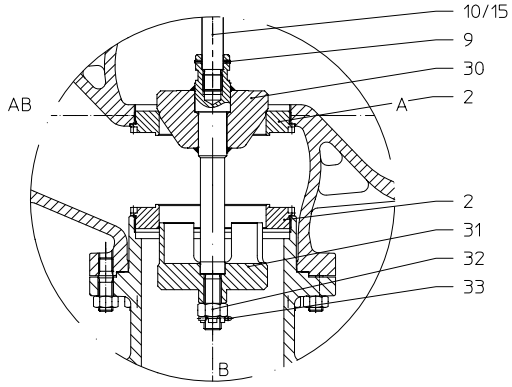

Plug design: Diverting plug

Pos.	Sp.p.	Description	Fig. 12.423	Fig. 22.423	Fig. 34.423 / Fig. 35.463
1		Body	EN-GJL-250 , EN-JL1040	EN-GJS-400-18U-LT, EN-JS1049	GP240GH+N, 1.0619+N
2	x	Seat ring	X20Cr13+QT, 1.4021+QT		
3		Bottom flange	EN-GJS-400-18U-LT, EN-JS1049		GP240GH+N, 1.0619+N
4		Giude bushing	X20Cr13+QT, 1.4021+QT		
5	x	Gasket	Pure graphite (CrNi laminated with graphite)		
6		Stud	25CrMo4, 1.7218		
7		Hexagon nut	C35E, 1.1181		
8	x	Plug	X20Cr13+QT, 1.4021+QT		
9	x	Clamping sleeve	X10CrNi18-8, 1.4310		
10	x	Stem	X20Cr13+QT, 1.4021+QT		
12		Stuffing box housing	EN-GJS-400-18U-LT, EN-JS1049		GP240GH+N, 1.0619+N
13		Giude bushing	X20Cr13+QT, 1.4021+QT (hardened)		
15	x	Stem adapter	X20Cr13+QT, 1.4021+QT		
17		Packing ring	Pure graphite		
19		Washer	X5CrNi18-10, 1.4301		
20		Packing box flange	EN-GJS-400-18U-LT, EN-JS1049		
21		Stud	25CrMo4, 1.7218		
22		Hexagon nut	C35E, 1.1181		
23		Adapter flange	EN-GJS-400-18U-LT, EN-JS1049		
24		Cheese head screw	8.8 - A2B		
30	x	Plug	X20Cr13+QT, 1.4021+QT		
31	x	Plug	X20Cr13+QT, 1.4021+QT		
32	x	Castle nut	C35E, 1.1181		
33		Cotter pin	A4		

Stem sealings Fig. 423			
17	x	Packing ring	PTFE
17	x	Packing ring	Pure graphite
120	x	EPDM-sealing	EPDM / X20Cr13+QT, 1.4021+QT
	└ Spare parts		

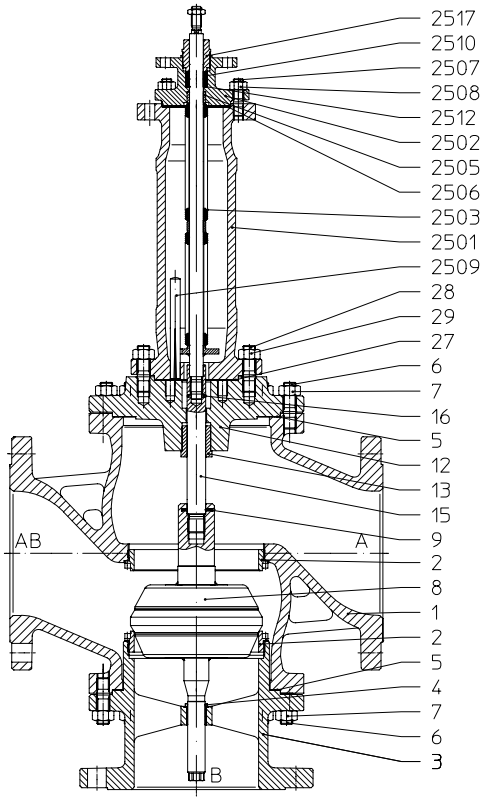

III. PTFE-packing / Pure graphite-packing

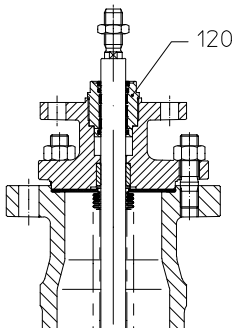

III. Stainless steel bellows seal with EPDM-sealing

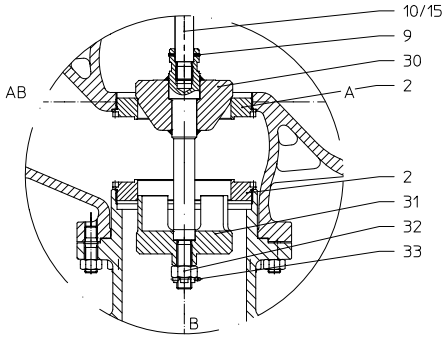

Plug design: Diverting plug

Pos.	Sp.p.	Description	Fig. 12.463	Fig. 22.463	Fig. 34.423 / Fig. 35.463
1		Body	EN-GJL-250 , EN-JL1040	EN-GJS-400-18U-LT, EN-JS1049	GP240GH+N, 1.0619+N
2	x	Seat ring	X20Cr13+QT, 1.4021+QT		
3		Bottom flange	EN-GJS-400-18U-LT, EN-JS1049		GP240GH+N, 1.0619+N
4		Giude bushing	X20Cr13+QT, 1.4021+QT		
5	x	Gasket	Pure graphite (CrNi laminated with graphite)		
6		Stud	25CrMo4, 1.7218		
7		Hexagon nut	C35E, 1.1181		
8	x	Plug	X20Cr13+QT, 1.4021+QT		
9	x	Clamping sleeve	X10CrNi18-8, 1.4310		
12		Stuffing box housing	EN-GJS-400-18U-LT, EN-JS1049		GP240GH+N, 1.0619+N
13		Giude bushing	X20Cr13+QT, 1.4021+QT (hardened)		
15	x	Stem adapter	X20Cr13+QT, 1.4021+QT		
16	x	Clamping sleeve	X10CrNi18-8, 1.4310		
2501		Bellows housing	EN-GJS-400-18U-LT, EN-JS1049		GP240GH+N, 1.0619+N
2502		Mounting bonnet	EN-GJS-400-18U-LT, EN-JS1049		GP240GH+N, 1.0619+N
2503	x	Stem- / Bellows unit	X20Cr13+QT, 1.4021+QT / X6CrNiTi18-10, 1.4541		
2505		Giude bushing	X20Cr13+QT, 1.4021+QT (hardened)		
2506	x	Gasket	Pure graphite (CrNi laminated with graphite)		
2507		Stud	25CrMo4, 1.7218		
2508		Hexagon nuts	C35E, 1.1181		
2509		Straight pin	St		
2510	x	Packing ring	Pure graphite		
2512		Washer	X5CrNi18-10, 1.4301		
2517	x	Screw joint	X8CrNiS18-9, 1.4305		
27	x	Gasket	Pure graphite (CrNi laminated with graphite)		
28		Stud	25CrMo4, 1.7218		
29		Hexagon nut	C35E, 1.1181		
30	x	Plug	X20Cr13+QT, 1.4021+QT		
31	x	Plug	X20Cr13+QT, 1.4021+QT		
32	x	Castle nut	C35E, 1.1181		
33		Cotter pin	A4		

Stem sealings Fig. 463			
2510	x	Packing ring	Pure graphite
120	x	EPDM-sealing	EPDM / X20Cr13+QT, 1.4021+QT
	└ Spare parts		

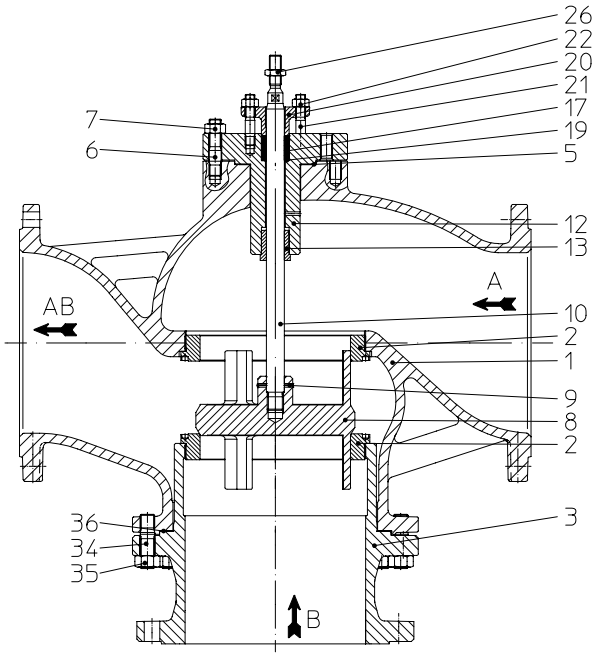

II. PTFE- / pure graphite-packing

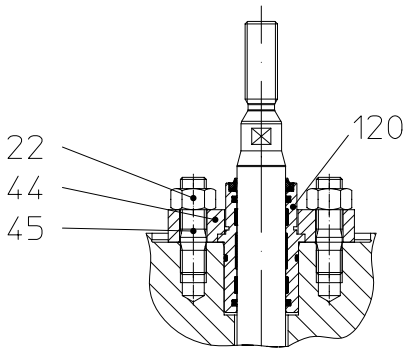

I. EPDM-sealing

Pos.	Sp.p.	Description	Fig. 22.423
1		Body	EN-GJS-400-18U-LT, EN-JS1049
2	x	Seat ring	X20Cr13+QT, 1.4021+QT
3		Bottom flange	EN-GJS-400-18U-LT, EN-JS1049
5	x	Gasket	Pure graphite (CrNi laminated with graphite)
6		Stud	25CrMo4, 1.7218
7		Hexagon nut	C35E, 1.1181
8	x	Plug	X20Cr13+QT, 1.4021+QT
9	x	Spring-type straight pin	X10CrNi18-8, 1.4310
10	x	Stem	X20Cr13+QT, 1.4021+QT
12		Stuffing box housing	P250 GH, 1.0460
13		Giude bushing	X20Cr13+QT, 1.4021+QT (hardened)
17	x	Packing ring	PTFE or Pure graphite
19	x	Washer	X5CrNi18-10, 1.4301
20		Packing box flange	EN-GJS-400-18U-LT, EN-JS1049
21		Stud	25CrMo4, 1.7218
22		Hexagon nut	C35E, 1.1181
26		Hexagon nut	17H-A4G
34		Stud	25CrMo4, 1.7218
35		Hexagon nut	C35E, 1.1181
36	x	Gasket	Pure graphite (CrNi laminated with graphite)
44		Packing box flange	EN-GJS-400-18U-LT, EN-JS1049
45		Stud	25CrMo4, 1.7218
Stem sealings Fig. 423			
17	x	Packing ring	PTFE
17	x	Packing ring	Pure graphite
120	x	EPDM-sealing	EPDM / X20Cr13+QT, 1.4021+QT
	└ Spare parts		

myValve® - Your Valve Sizing-Program.

myValve® is a powerful software tool that not only helps you size your system components; it also gives you instant access to all other data about the selected product, such as order information, spare parts drawings, operating instructions, data sheets, etc., whenever you need it.

Contents:

Module ARI-control valves STEVI-calculation

- Sizing (calculation of flow quantity Kv, volume flow Q, pressure drop Δp, sound level and selecting the valve.)

Media:

Integrated media-databank (more than 160 media) with conditions:

- Vapours / gases
- Steam (saturated and superheated)
- Liquids

Special features:

- Project administration of the calculation and product data incl. spare part drawings concerning to project and tag number.
- Direct output or calculation and product data in PDF format.
- Product data could be taken for a direct order.
- SI- and ANSI-units with direct conversion to another databank.
- Settings with over pressure or absolute pressure.
- All ARI valves are integrated in a databank.
- Direct access concerning to the product on data sheets, operating instructions, pressure-temperature-diagram and spare part drawings
- Operation in company networks possible (no complex installations on individually PC's necessary).
- Extensive catalogue extending over several product groups.

System Requirements:

Windows operating systems, Linux, etc.